www.wilwood.com

ASSEMBLY INSTRUCTIONS

FOR

SUPERLITE 6 BIG BRAKE FRONT HAT KIT
ROAD RACE APPLICATION, 12.90” DIAMETER VENTED ROTOR

1994 - 2004 MUSTANG (5 LUG, STOCK OFFSET)

PART NUMBER GROUP

140-7191

DISC BRAKES SHOULD ONLY BE INSTALLED BY SOMEONE EXPERIENCED AND COMPETENT IN THE INSTALLATION AND MAINTENANCE OF DISC BRAKES

READ ALL WARNINGS

WARNING

IT IS THE RESPONSIBILITY OF THE PERSON INSTALLING ANY BRAKE COMPONENT OR KIT TO DETERMINE THE SUITABILITY OF THE COMPONENT OR KIT FOR THAT PARTICULAR APPLICATION. IF YOU ARE NOT SURE HOW TO SAFELY USE THIS BRAKE COMPONENT OR KIT, YOU SHOULD NOT INSTALL OR USE IT. DO NOT ASSUME ANYTHING. IMPROPERLY INSTALLED OR MAINTAINED BRAKES ARE DANGEROUS. IF YOU ARE NOT SURE, GET HELP OR RETURN THE PRODUCT. YOU MAY OBTAIN ADDITIONAL INFORMATION AND TECHNICAL SUPPORT BY CALLING WILWOOD AT (805) 388-1188, OR VISIT OUR WEB SITE AT WWW.WILWOOD.COM. USE OF WILWOOD TECHNICAL SUPPORT DOES NOT GUARANTEE PROPER INSTALLATION. **YOU**, OR THE PERSON WHO DOES THE INSTALLATION MUST KNOW HOW TO PROPERLY USE THIS PRODUCT. IT IS NOT POSSIBLE OVER THE PHONE TO UNDERSTAND OR FORESEE ALL THE ISSUES THAT MIGHT ARISE IN YOUR INSTALLATION.

RACING EQUIPMENT AND BRAKES MUST BE MAINTAINED AND SHOULD BE CHECKED REGULARLY FOR FATIGUE, DAMAGE, AND WEAR.

Need Additional Information? Use Your SmartPhone and Jump to Our Technical Tips Section on Our Web Site.

WARNING

DO NOT OPERATE ANY VEHICLE ON UNTESTED BRAKES!

SEE MINIMUM TEST PROCEDURE WITHIN

ALWAYS UTILIZE SAFETY RESTRAINT SYSTEMS AND ALL OTHER AVAILABLE SAFETY EQUIPMENT WHILE OPERATING THE VEHICLE

IMPORTANT • READ THE DISCLAIMER OF WARRANTY INCLUDED IN THE KIT

NOTE: Some cleaners may stain or remove the finish on brake system components. Test the cleaner on a hidden portion of the component before general use.

Important Notice - Read This First

Before any tear-down or disassembly begins, review the following information:

- **Review the wheel clearance diagram (figure 2, page 3) to verify that there is adequate clearance with the wheels you will be using with the installation.**
- **Front brake kits do not include flex lines. OEM brake lines will not adapt to Wilwood calipers. Check the assembly instructions, or associated components section for brake line recommendations before assembly. In addition, Wilwood offers an extensive listing of brake lines and fittings on our web site: www.wilwood.com.**
- **Due to OEM production differences and other variations from vehicle to vehicle, the fastener hardware and other components in this kit may not be suitable for a specific application or vehicle.**
- **It is the responsibility of the purchaser and installer of this kit to verify suitability / fitment of all components and ensure all fasteners and hardware achieve complete and proper engagement. Improper or inadequate engagement can lead to component failure.**

Photographic Tip

We suggest you take digital photos of the brake system setup before and during the disassembly procedure. This will aid in the event that something is not compatible with the new brake components and be a valuable tool to assist in the trouble-shooting process.

Exploded Assembly Diagram

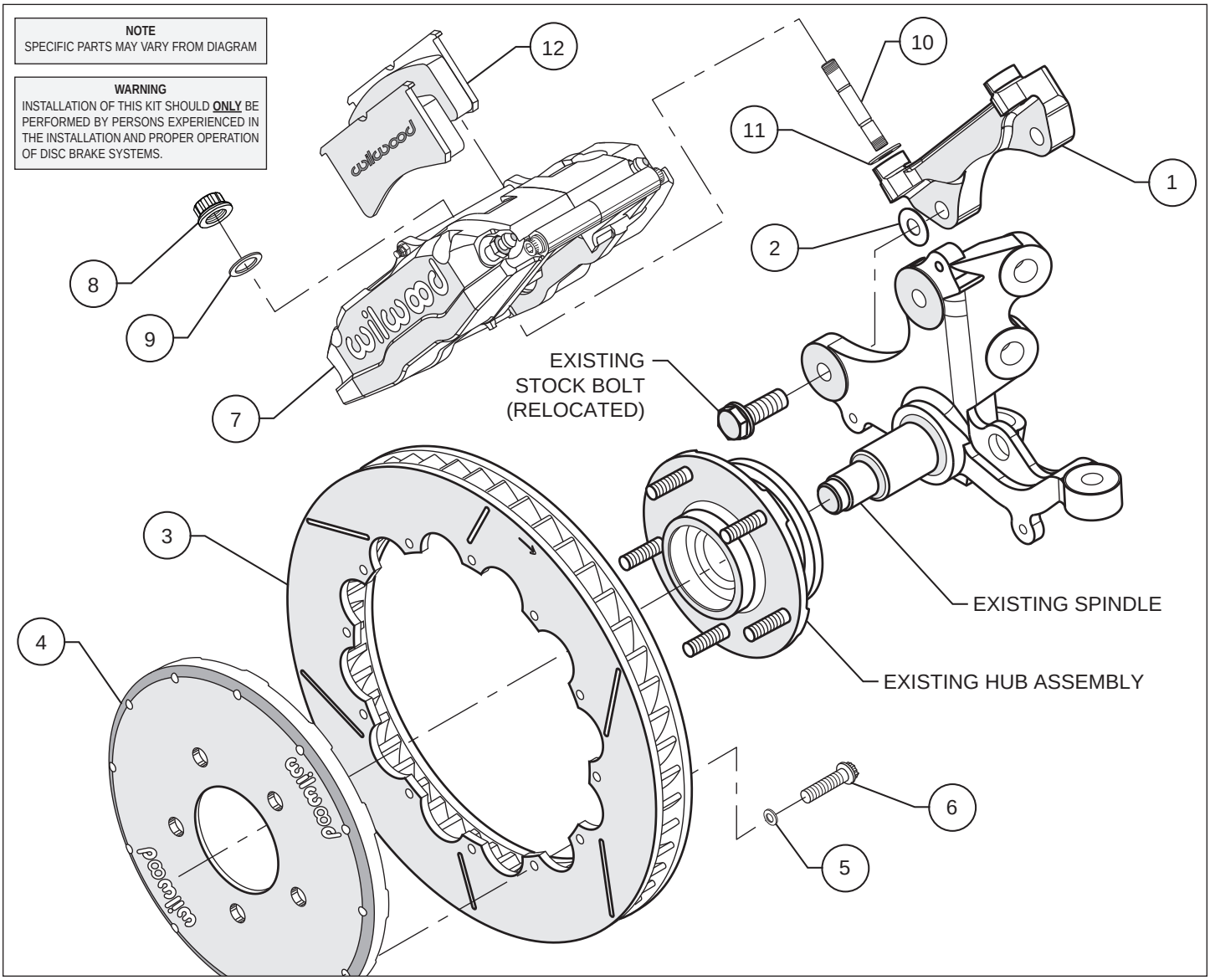

Figure 1. Typical Installation Configuration

Parts List

ITEM NO.	PART NO.	DESCRIPTION	QTY
1	250-6216	Bracket, Caliper Mounting	2
2	240-6320	Shim, .033 Thick	8
3	160-4564/65	Rotor, 1.25” Thk x 12.90” Dia, 12 x 8.75” Bolt Circle	2
4	170-6223	Hat	2
5	240-11240	Washer, .265 I.D. x .500 O.D. x .063 Thick	24
6	230-6737	Bolt, 1/4-20 x 1.00 Long, 12 Point	24
7	120-6385/86-RS	Caliper, Billet Superlite 6R, Wide 5	2
8	230-9183	Nut, 3/8-24, Self-Locking 12 Point	4
9	240-10190	Washer, .391 I.D. x .625 O.D. x .063 Thick	4
10	230-9078	Stud, 3/8-16 x 3/8-24 x 2.5 long (pre installed in bracket)	4
11	240-1159	Shim, .035 Thick	16
12	15H-8114K	Pad, Polymatrix “H” Compound, Axle Set	1
13	220-6458	Braided Stainless Steel Hose Kit (not shown)	1

NOTES:
Part Number 230-4572 Rotor Bolt Kit, includes part numbers 230-6737 and 240-11240
Part Number 250-6249 Caliper Bracket Mounting Bolt Kit, includes P/N’s 230-9183, 230-9078, 240-1159, 240-10190, 240-6320 & 250-6216

General Information, Disassembly, and Assembly Instructions

*Installation of this kit should **ONLY** be performed by persons experienced in the installation and proper operation of disc brake systems.* Before assembling the Wilwood front disc brake kit, double check the following items to ensure a trouble-free installation.

•Make sure this is the correct kit to match the exact make and model year of the vehicles spindle (i.e., kits for a 2002 Mustang spindle will not fit a 1986 Mustang spindle).

•Verify the factory hub stud pattern matches the brake hat in this kit.

•Verify your wheel clearance using Figure 2.

•Inspect the package contents against the parts list to ensure that all components and hardware are included.

•***WARNING:*** *Brake pads included in this kit are intended for high temperature race use only.* Extended use at low temperature can cause accelerated rotor and pad wear. Please see the associated components list on the last page of this data sheet for alternative brake pad compounds for other uses.

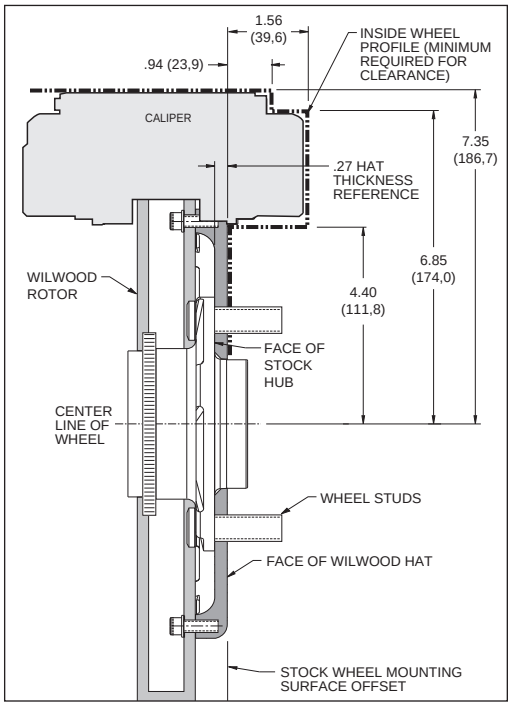

Figure 2. Wheel Clearance Diagram

Disassembly

•Disassemble the original equipment front brakes:

Raise the front wheels off the ground and support the front suspension according to the vehicle mamnufacturer’s instructions.

Remove the wheel. Remove the two bolts from the backside of the spindle that hold the stock caliper mounting bracket and lift off the bracket and stock caliper as one unit. If space is a problem, you may have to unbolt the stock caliper from the caliper bracket before removal. Save the stock caliper mounting bracket bolts, they will be utilized during reassembly, then slide off the stock hat and rotor assembly. Optional: Removal of the dust face plate to facilitate easy removal of additional parts and/or for aesthetic purposes if you will be running spoked wheel and would like to see the slotted rotor.

•Clean and de-grease the spindles as well as the stock caliper bracket bolts. Remove all nicks or burrs on the spindle snout and threads.

Assembly Instructions (numbers in parenthesis refer to the part list/diagram on the preceding page):

•Apply red *Loctite*® 271 to the stock caliper mounting bracket bolt threads before installation of the caliper mounting bracket (1). Install the stock bolts from the near side (opposite from the way they were removed) and place a washer (2) between the spindle assembly and the caliper mounting bracket (1). Torque stock bolts to 65 ft-lb.

Assembly Instructions (Continued)

•With the larger I.D. side of the rotor (3) facing away from the hat (4), bolt rotor (3) to hat (4) through the backside of the rotor using washers (5) and bolts (6). Using an alternating sequence, apply red *Loctite*® 271 to the threads and torque bolts to 155 **in-lb**. For an added measure of security, the bolts may be safety wired using standard 0.032 inch diameter stainless steel safety wire as shown in Figure 3. Please refer to Wilwood's data sheet DS-386 (available at www.wilwood.com/Pdf/DataSheets/ds386.pdf) for complete safety wire installation instructions. Slide the rotor/hat assembly onto the spindle. Install a couple of lug nuts (hand tighten) to keep the rotor/hat assembly in place while continuing with the installation.

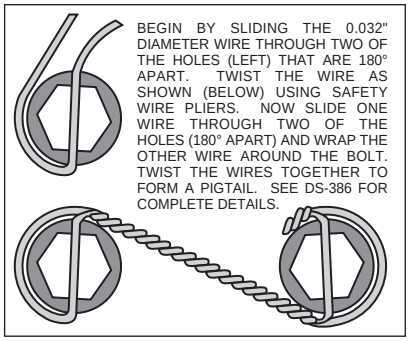

Figure 3. Safety Wire Diagram

•With the bleed screws pointing up, mount the caliper (7) onto the caliper bracket (1) with the self locking hex nut (8), flat washer (9), through the top of the caliper and mounting stud (10) with flat washer (11) positioned between caliper (7) and caliper mounting bracket (1). Finger tighten. View the rotor (3) through the top opening of the caliper (7). The rotor (3) should be aligned in the center of the caliper (7). If not, adjust the caliper (7) by using 0.035 inch thick shims (2) placed between the spindle assembly and the caliper mounting bracket (1). Finger tighten and recheck alignment. Lubricate caliper mounting studs and nuts with lightweight oil, reinstall the caliper, torque the caliper bolts (8) to 30-- ft-lb.

•Remove the bridge bolt from the caliper (7) and install the disc brake pads (12). Reinstall the caliper bridge bolt.

•Remove the two lug nuts that were used to hold the rotor/hat assembly in place during caliper installation. Install the wheel and lug nuts, torque to OEM specifications.

•Repeat the procedure for the other wheel.

•***NOTE****: OEM rubber brake hoses generally cannot be adapted to Wilwood calipers. The caliper inlet fitting is a 1/8-27 NPT.* The preferred method is to use steel adapter fittings at the caliper, either straight, 45 or 90 degree and enough steel braided line to allow for full suspension travel and turning radius, lock to lock. **Carefully route lines to prevent contact with moving suspension, brake or wheel components.** Wilwood hose kits are designed for use in many different vehicle applications and it is the installer's responsibility to properly route and ensure adequate clearance and retention for brake hose components.

•Specified brake hose kits may not work with all Years, Makes and Models of vehicle that this brake kit is applicable to, due to possible OEM manufacturing changes during a production vehicle's life. It is the installer's responsibility to ensure that all fittings and hoses are the correct size and length, to ensure proper sealing and that they will not be subject to crimping, strain and abrasion from vibration or interference with suspension components, brake rotor or wheel.

•In absence of specific instructions for brake line routing, the installer must use his best professional judgment on correct routing and retention of lines to ensure safe operation. Test vehicle brake system per the 'minimum test' procedure stated within this document before driving. After road testing, inspect for leaks and interference. Initially after install and testing, perform frequent checks of the vehicle brake system and lines before driving, to confirm that there is no undue wear or interference not apparent from the initial test. Afterwards, perform periodic inspections for function, leaks and wear in a interval relative to the usage of vehicle.

• Bleed the brake system. Reference the general information and recommendations on page 5 for proper bleeding instructions.

Additional Information and Recommendations

•Please read the following concerning balancing the brake bias on 4 wheel disc vehicles.

•OE Style or Single Mount Race Pedal with Tandem Outlet Master Cylinder:
Front to rear caliper piston sizes, rotor diameters, and pad compounds must be initially configured to provide the correct range of vehicle bias when using a single bore / tandem outlet master cylinder. If excessive rear brake bias is experienced, an inline adjustable proportioning valve can be used to decrease the rear line pressure to help bring the vehicle into balance. If excessive front brake bias is experienced, first consideration should be given to increasing the rear brake bias to bring the vehicle into overall balance.

•Race Pedal with Dual Master Cylinders and Balance Bar:
Master cylinders must be sized to match the calipers and allow the pedal balance bar to operate near the center of its travel. If it is not possible to fine tune the bias within the adjustable range of the balance bar, then consideration must be given to changing a master cylinder bore size or some other aspect of the brake system to bring the car into balance. Larger bore master cylinders will generate less pressure while decreasing pedal travel. Smaller bores master cylinders will generate higher line pressures with an increase in pedal travel.

NOTES:
1. New master cylinders should be bench bled prior to installation.
2. If the master cylinder fluid reservoirs are mounted lower than the calipers, an inline 2 lb residual pressure valve may be necessary to prevent fluid flowback and the subsequent long initial pedal stroke required to actuate the system.

For all types of pedals and master cylinders:

•Test the brake pedal. It should be firm and consistent. If not, first try re-bleeding the system. The pedal should stop at least 1" or more from the floor under heavy load. Pedal height must be comfortable to the driver.

•If the pedal is initially firm, but then travels to the floor, check the entire system for leaks. This may also be a sign of a faulty master cylinder.

•If the pedal is constantly spongy, and repeated bleeding does not correct the problem, the master cylinder selection and pedal geometry may need re-evaluated.

•If you are still experiencing difficulty after all instructions have been followed, consult your chassis shop, the retailer where the kit was purchased, or the Wilwood Tech Line.

Test Driving the Vehicle:

•Make a series of light stops at low speed to assure proper system operation. Then proceed to the rotor and pad bedding procedure.

New Rotor Bedding:

•Make a series of light, then medium, then gradually harder stops to bring the rotors up to near operating temperature. Then use a few cool down laps to allow the rotors to cool. Avoid using the brakes during the cool down. This will act as the final stress relief on the rotors. If possible, allow the rotors to cool completely before competition and subsequent pad bedding. Be cautious to avoid heat shocking the rotors by heating or cooling them too quickly when they are new. It is also a good practice to warm the brakes prior to any competition to avoid thermal shock and potential stress fractures.

New Pad Bedding:

•This procedure is similar to the rotor bedding process. Make a series of light, then medium, then gradually harder stops to bring the pads to full operating temperature. Then use a few cool down laps to allow the pads to cool. Avoid using the brakes during the cool down. If possible, allow the brakes to cool completely before participating in competition. This process will properly mate the pads with the rotor surface and act as the final curing step for the friction compound. Following this procedure will assure the best performance and service life from your brakes.

Brake Testing

WARNING • DO NOT DRIVE ON UNTESTED BRAKES
BRAKES MUST BE TESTED AFTER INSTALLATION OR MAINTENANCE
MINIMUM TEST PROCEDURE

- Make sure pedal is firm: Hold firm pressure on pedal for several minutes, it should remain in position without sinking. If pedal sinks toward floor, check system for fluid leaks. DO NOT drive vehicle if pedal does not stay firm or can be pushed to the floor with normal pressure.
- At very low speed (2-5 mph) apply brakes hard several times while turning steering from full left to full right, repeat several times. Remove the wheels and check that components are not touching, rubbing, or leaking.
- Carefully examine all brake components, brake lines, and fittings for leaks and interference.
- Make sure there is no interference with wheels or suspension components.
- Drive vehicle at low speed (15-20 mph) making moderate and hard stops. Brakes should feel normal and positive. Again check for leaks and interference.
- Always test vehicle in a safe place where there is no danger to (or from) other people or vehicles.
- Always wear seat belts and make use of all safety equipment.

PAD BEDDING STEPS:

Once the brake system has been tested and determined safe to operate the vehicle, follow these steps for bedding of all pad materials and rotors. This procedure should be performed on a race track or other safe location where you can safely and legally obtains speeds up to 65 MPH while also being able to rapidly decelerate.

•Proceed with a series of 8-10 hard stops from 55-65 MPH down to 25 MPH allowing 20-30 seconds of cool down time between each stop.

•Drive at a moderate cruising speed, with the least amount of brake contact possible, until most of the heat has dissipated from the brakes. Avoid sitting stopped with the brake pedal depressed to hold the car in place during this time. Park the vehicle and allow the brakes to cool to ambient air temperature.

Associated Components

PART NO.	DESCRIPTION
260-1874	Wilwood Residual Pressure Valve (2 lb for disc brakes)
260-8419	Wilwood Proportioning Valve, Knob Style
260-8420	Wilwood Proportioning Valve, Lever Style
290-6209	Wilwood Racing Brake Fluid (EXP 600 Plus) (16.9 oz)
340-1285	Wilwood Floor Mount Brake Pedal (with balance bar)
340-1287	Wilwood Swing Mount Brake Pedal (with balance bar)
260-3376	Wilwood 7/8 inch Bore Combination Master Cylinder
260-5920	Wilwood 13/16 inch Bore Combination Master Cylinder
260-8555	Wilwood 1 inch Aluminum Tandem Chamber Master Cylinder
260-8556	Wilwood 1-1/8 inch Aluminum Tandem Chamber Master Cylinder
15A-5938K	PolyMatrix 7420 “A” Compound Brake Pads (high temp race only)
15B-5939K	PolyMatrix 7420 “B” Compound Brake Pads (high temp race only)
15E-6084K	PolyMatrix 7420 “E” Compound Brake Pads (medium temperature)
150-8854K	BP-10 7420 Compound Brake Pads (low to medium temperature)
130-5972	Caliper O-Ring Seal Kit
220-6458	Flexline Stainless Steel Hose Kit
	(Consult the Wilwood Tech Catalog for a complete parts list)